BENETECH® MaxZone® Standard Quote Request

Customer:	
Location/Plant:	
Belt Name/Number:	
Belt Width:	
Material(s) Handled:	
Conveyor Structure: ◯Channel Frame ◯Truss Frame	

Trough Angle: ◯20° ◯35° ◯45° ◯Other:	
Transition Distance:	
Belt Speed:	
Belt Tonnage:	
Conveyor Base: ◯Standard ◯Wide Base	

BENETECH MaxZone®
Patent # 8,800,756

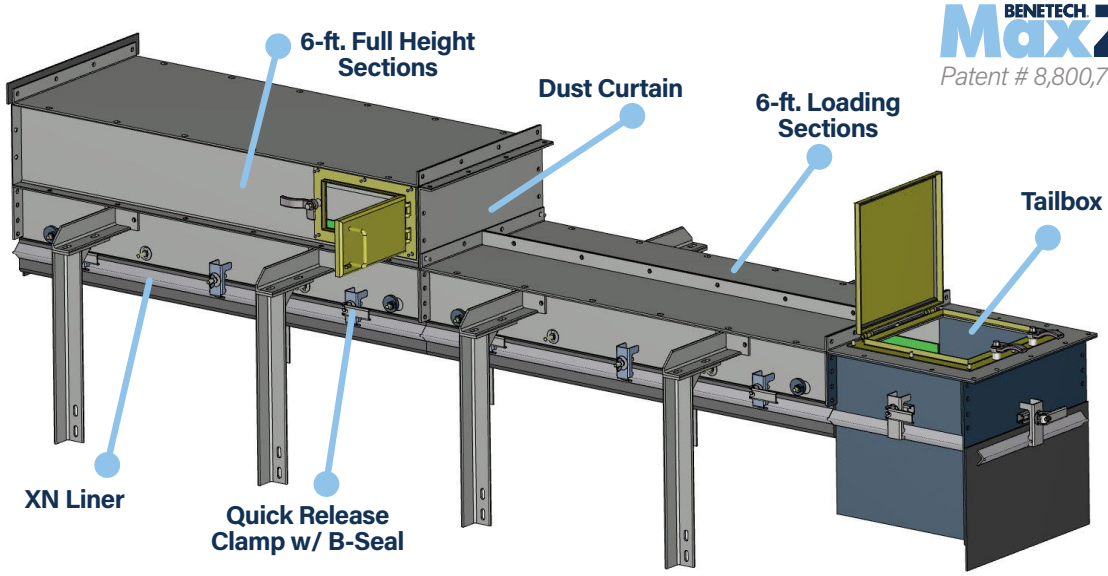

Loading Sections
Includes XN Liner assembly & split flat top for chute integration

Number of 6-ft. Sections:	
Material:	☐ Mild Steel ☐ Stainless ☐ Painted ☐ Unpainted
Liner Material:	☐ AR400 ☐ Other, please specify: _____
Covers:	☐ Flat Full Width Qty:
	☐ Flat Split Qty:

Full Height Sections
Includes XN Liner assembly; 12-in. side wall; & hood

Number of 6-ft. Sections:	
Material:	☐ Mild Steel ☐ Stainless ☐ Painted ☐ Unpainted
Covers:	☐ Flat Full Width Qty:
	☐ Flat Split Qty:
Door Qty:	**Dust Curtain Qty:**

Seal: ◯B ◯B+ ◯Classic Plus ◯Other, please specify:

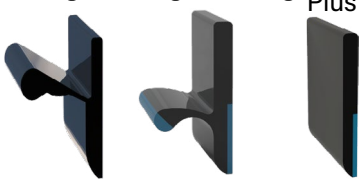

Tailbox

Length:	◯2-ft. ◯4-ft.	**Doors:**	◯Yes ◯No

If MaxZone is being added to existing skirtbox:

Inside-to-inside width of existing skirtbox:
Height of existing skirtbox at walls:
Height of existing skirtbox at center of belt:

Contact Information for Quote

Name:
Company:
Branch Location:
Phone:
Email:

Benetech, Inc.
(630) 844-1300
BenetechGlobal.com
info@BenetechUSA.com